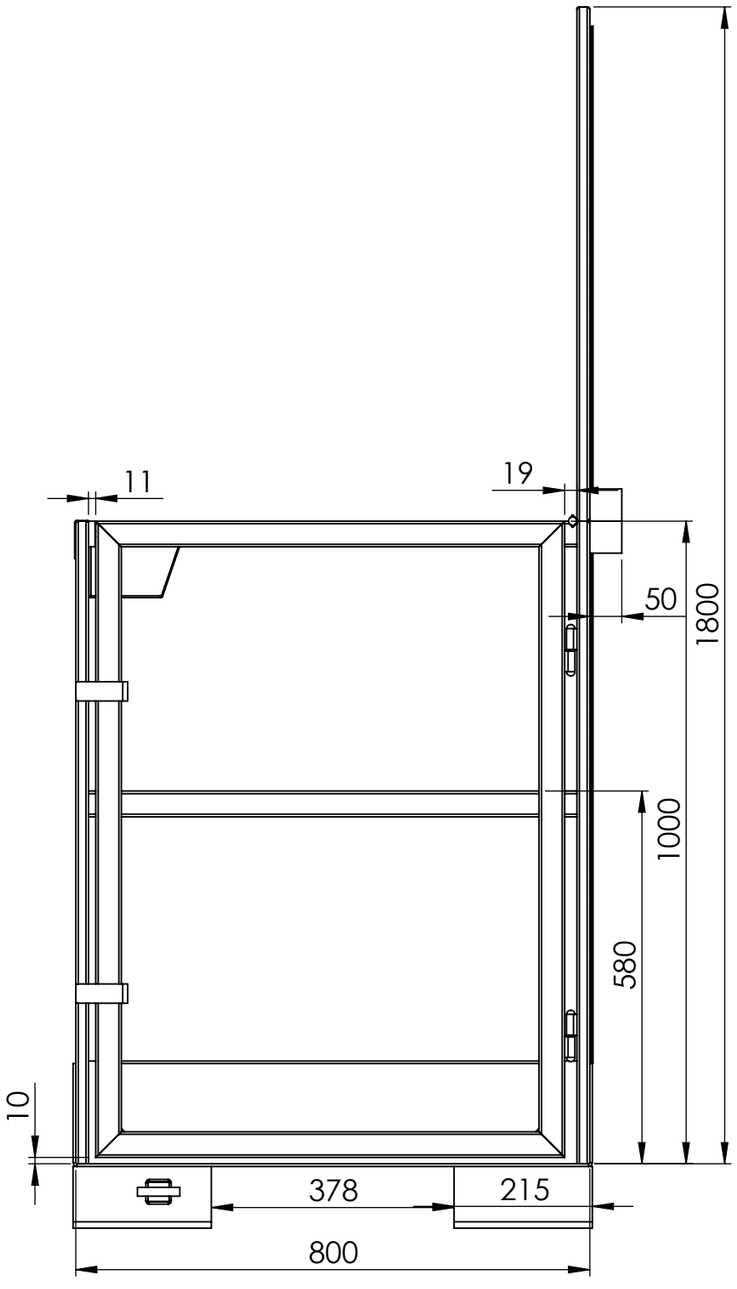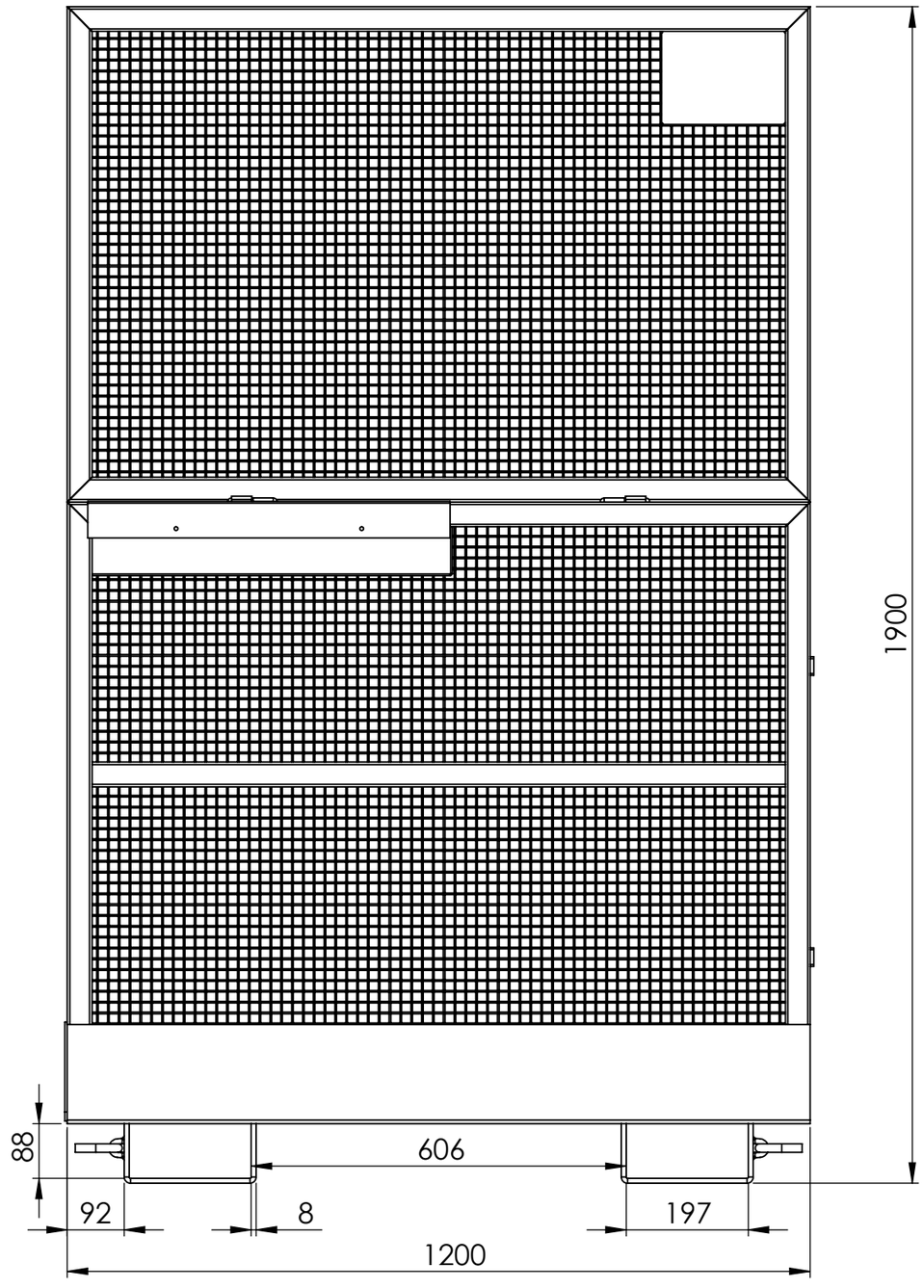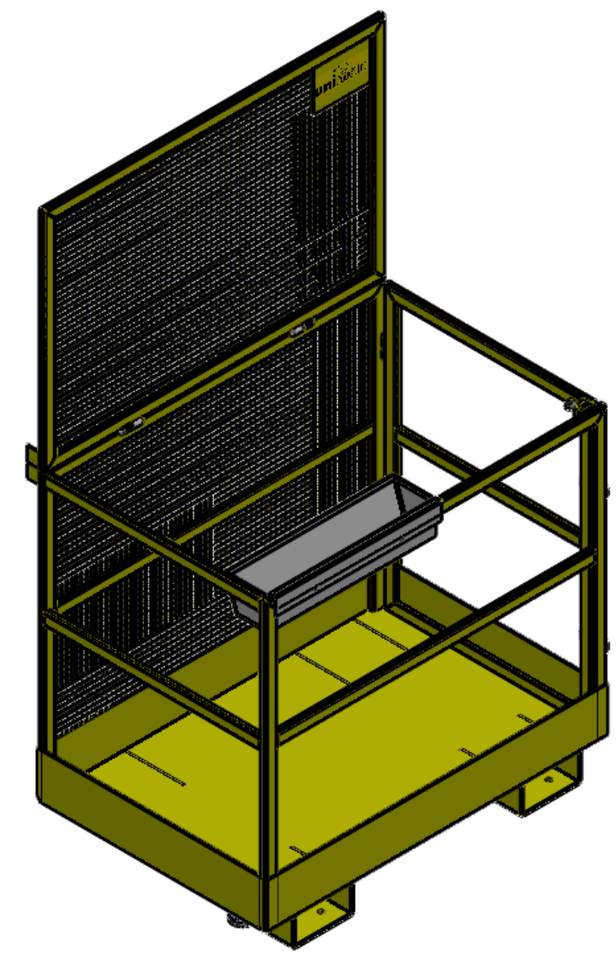WLL 250 kg